INTERNATIONAL JOURNAL OF RESEARCHES IN BIOSCIENCES, AGRICULTURE AND TECHNOLOGY
© VISHWASHANTI MULTIPURPOSE SOCIETY (Global Peace Multipurpose Society) R. No. MH-659/13(N)
www.vmsindia.org

PC BASED IV MEASUREMENT SYSTEM WITH PROGRAMMABLE CURRENT SOURCE

V. V. Bhide[1], K. V. Sukhatankar[1] and M. M. Belekar[1]
[1] Lokmanya Tilak Institute of Post Graduate Teaching and Research,
Gogate Jogalekar College, Ratnagiri, Maharashtra, India 415612.
vivekvbhidestar@gmail.com

Abstract

A PC based system to measure; record and plot Current-Voltage (I-V) characteristics of a semiconductor sample have been designed and developed. The various modules of the system are programmable current source, current to voltage converter and data acquisition system. The programmable current source makes use of 12 bit DAC which provides high precision current at its output (0 – 1mA). With incorporation of the 'analog switch selectable offset current this range is extended to 0 -10 mA where the current may be raised with smallest step of 200 nA.Current to voltage converter stage with sample under test connected in its feedback path provides voltage across sample as its output voltage which is measured by 12 bit ADC and values of both the sample current and sample voltage are stored. The current measurement is ensured by sending the current through known resistance in feedback path of current to voltage converter; during each measurement step before it is being passed through the sample. The system allows I-V measurement with sample current in both the directions. User friendly software in Visual Basic 6.0 has been developed in the interactive mode to store the I-V data and plot it simultaneously. The system shows good accuracy, repeatability, reliability and is relatively inexpensive. In this paper we present the details of this system and discuss its performance.

Keywords: IV measurement system, programmable current source.

Introduction:

One of the important techniques to study the properties of semiconductor device is to study its current-voltage characteristic. Since I-V measurement done manually is tedious and time consuming, it is desirable to introduce automation by use of computer. Such a computer based system also avoids error which may occur in manual measurement. K.V.Sukhatankar has earlier designed and developed a PC based I-V measurement system with programmable voltage source.[1] and subsequently used it to study characteristics of n+-GaAs substrate implanted with 70MeV ^{120}Sn ions.[2] Reddy et al has designed a data acquisition system which could be coupled to a PC, C-V meter and/or electrometer.[3] In this paper we present the design of a PC based I-V measurement system with programmable current source. In the present system there is no need of additional control on the increment of the current through the low resistance device to avoid excess current.

I-V MEASUREMENT SYSTEM

Fig. 1 shows block diagram of I-V measurement system. It consist of a PC compatible high speed multifunction data acquisition card PCI 1711 from "Advantech India Pvt. Ltd." programmable current source and current to voltage converter stage. The data acquisition card consist of i) 16 bit TTL compatible digital output channels, ii) 16 bit TTL compatible digital input channels, iii) Two 12- bit digital to analog converters, iv) 12 bit successive approximation analog to digital converter with bipolar input and 16 single ended multiplexed input ADC channels. Suitable software written in Visual basic 6.0 in an interactive mode integrates all these blocks together with PC to record and display I-V characteristic of semiconductor sample.

PROGRAMMABLE CURRENT SOURCE

The programmable current source consists of a 12 bit high precision DAC AD7521, regulated voltage source, TTL to CMOS interface circuit [4] and analog switch CD4066A. Current provided by DAC 7521 is controlled by TTL compatible digital outputs D3—D0, D15—D8 of multifunction IO card. A voltage regulator with LM317 and resistors R7, R8 is used to provide reference voltage of 12 V to DAC 7521. Three analog switches of CD4066A and precision resistors R1, R2, R3 are used to add offset current to the current provided by DAC 7521. TTL compatible digital outputs D4, D5, D6 with TTL to CMOS interface circuit are used to control analog switches of CD4066A.

With the reference voltage of 12 V, DAC 7521 provides a full scale current of 1 mA. Resistor R1, R2, R3 provides selectable off-set currents of 1 mA, 2 mA and 4 mA respectively through bits D4, D5 and D6 of digital outputs and TTL to CMOS interface.

CURRENT / VOLTAGE MEASUREMENT CIRCUIT

The current to voltage converter block is integrated around OPAMP 741, 4:1 analog multiplexer CD4052 and 2:1 analog multiplexer CD4053. This block has two parts current

measurement part and voltage measurement part.

To measure current provided by programmable current source, it is passed through current to voltage converter with reference resistor in feedback path. To minimize the error in the measurement three resistors are used for three different current ranges of current. Voltage across the sample is measured using same current to voltage converter with sample under test in feedback path.

Analog outputs of multifunction I/O card DAC_0 and DAC_1 are used to select feedback component

The software takes care of change in feedback resistor whenever necessary.

A triple 2:1 analog multiplexer CD4053 is used to reverse direction of current through the sample. Bit D7 of data acquisition card with transistor as TTL to CMOS interface is used to control this multiplexer. When bit D7 is 0, current is assumed to be positive and with D7 as 1, current is assumed to be negative.

SOFTWARE

User friendly software has been developed in Visual Basic 6.0 in an interactive mode with following features.

1. User can calibrate the system with standard resistor as a sample.
2. User can decide limiting values of sample current and sample voltage.
3. User can decide step value of current increment.
4. To minimize the error in current / voltage measurement, 100 readings are taken and the average is used to calculate current / voltage
5. It is possible to view the I-V curve and store the data simultaneously.

The software provides three facilities Calibration of the system with standard resistor, I-V reading for semiconductor sample and Plotting of I-V characteristic for data file. The flowchart for two menus, calibration and I-V readings, are as shown in fig 4 through fig 5.

Result and Discussion

The system was used to carry out I-V characteristics of standard resistors (1 KOhm, 10 KOhm), zener diode (Vz = 4.7 V) and a LED (Green). Fig 6 through fig 9 shows I-V characteristics of the same. From fig 6, it is clear that the system has a good linearity even in the low current range (0 to 0.1 mA). Fig 8 shows the characteristic curve for zener in both the regions. It is observed that the system can record current and voltage in both the regions precisely.

In the present system there is limit on minimum value of current. Precision of the system can be further improved by proper selection of high resolution precise DAC and OPAMP with high input impedance and high output capacity.

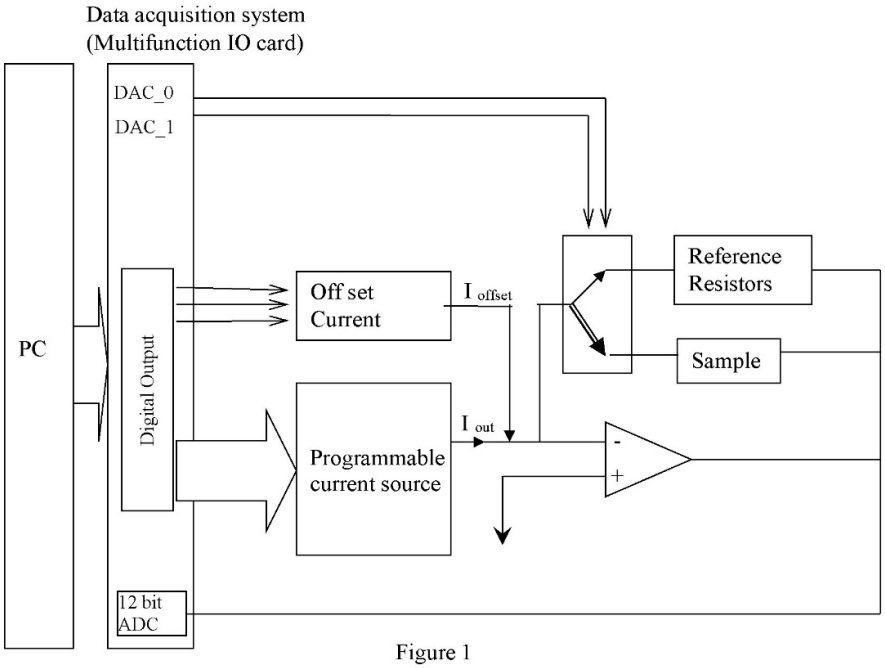

Figure 1

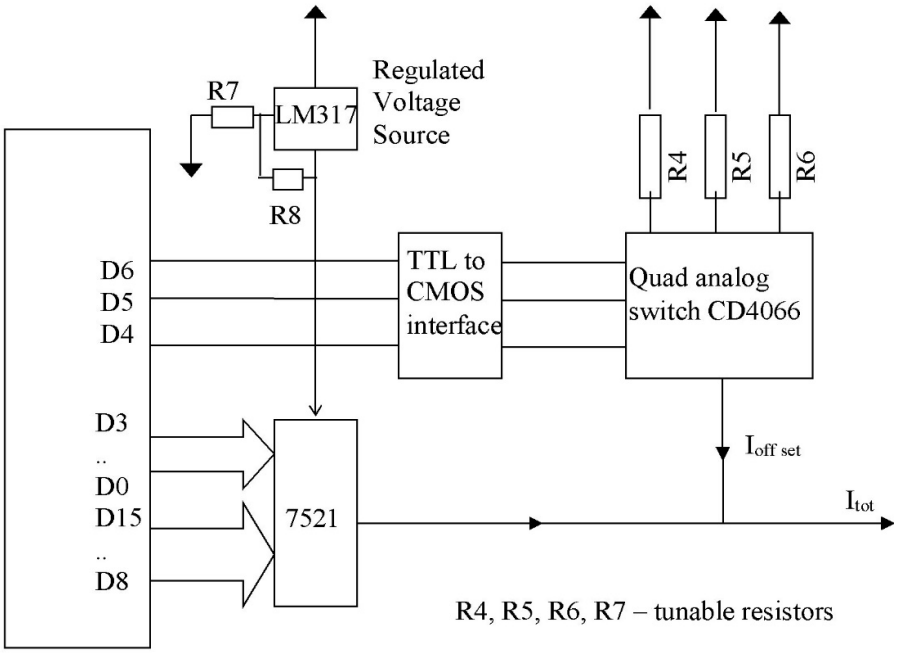

Figure 2

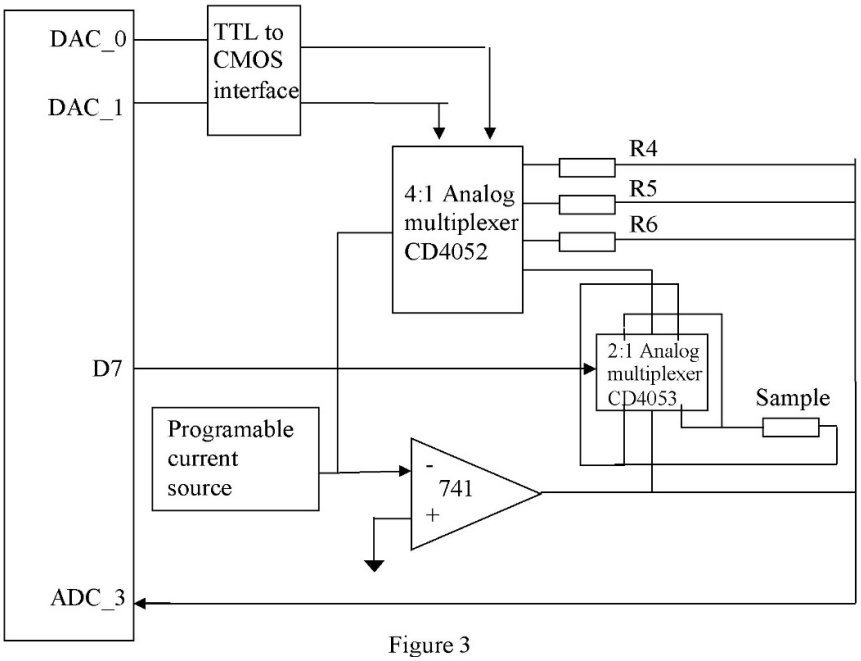

Figure 3

Calibration

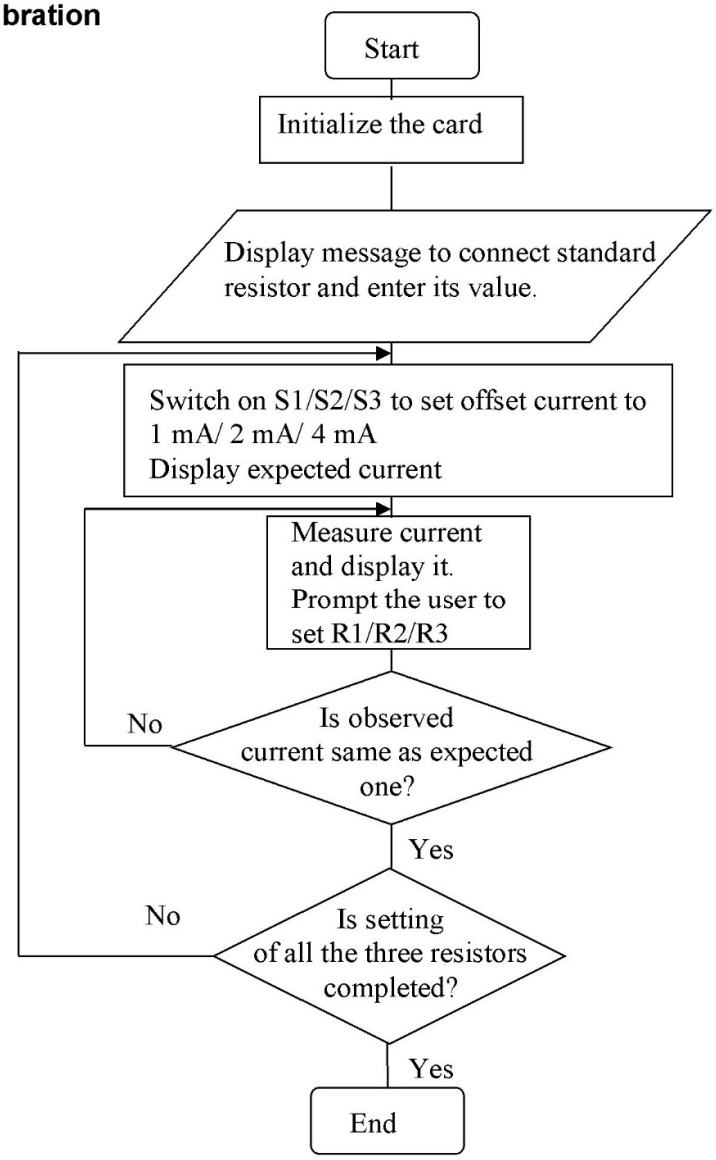

Figure 4

I-V measurement

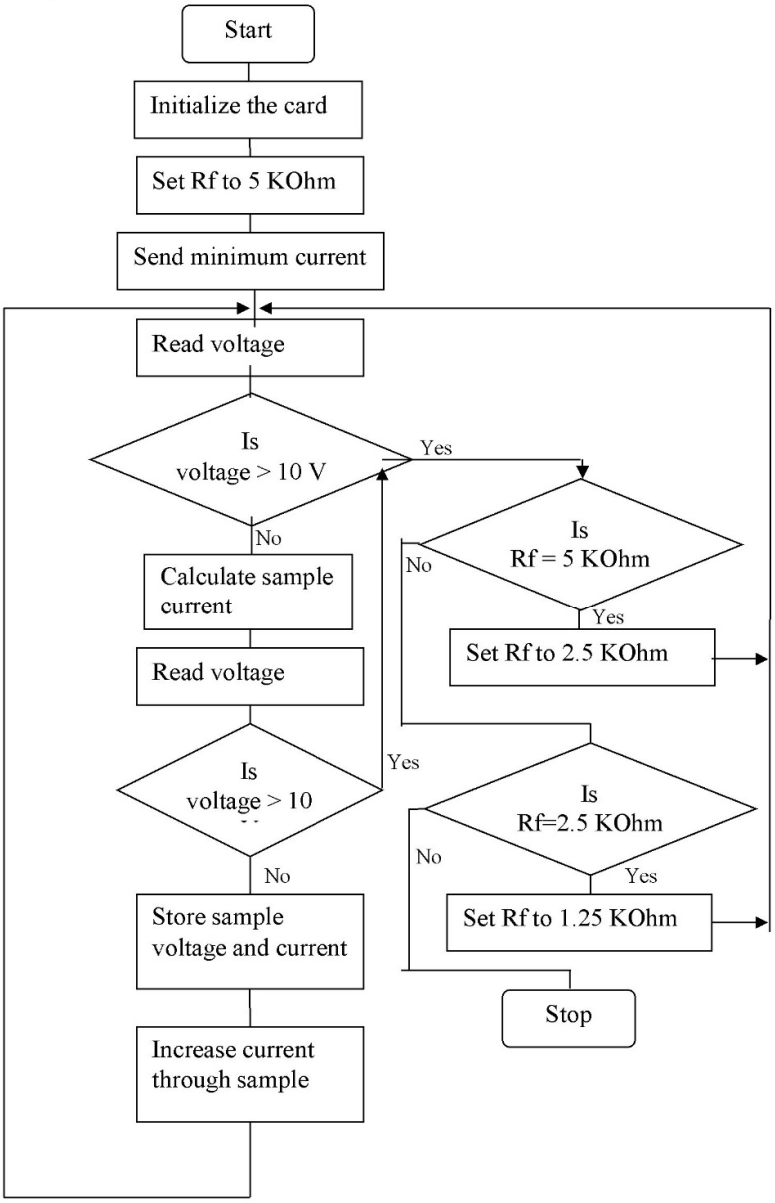

Figure 5

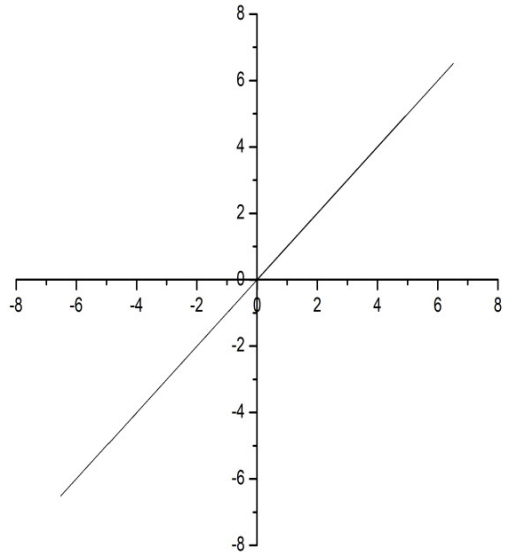

Figure 6

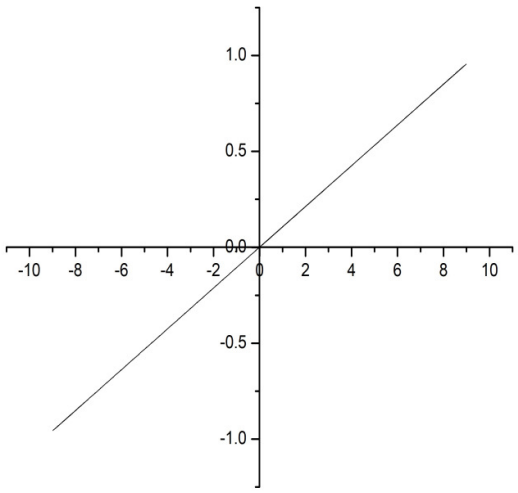

Figure 7

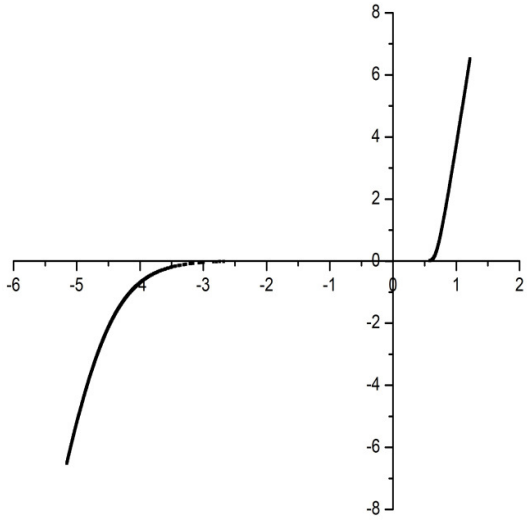

Figure 8

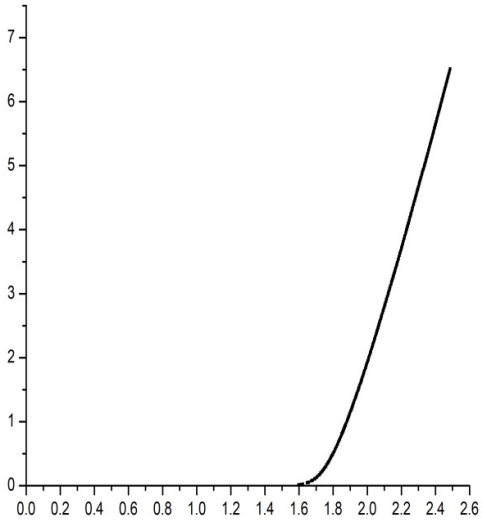

Figure 9

Conclusion

We have described design and development of a PC based IV measurement system with programmable current source. The system can measure, store and plot the I-V characteristic of a semiconductor sample with better accuracy. The system can be used to study I-V characteristics of semiconductor samples.

References

[1] A low cost PC based I-V measurement setup for semiconductor devices. K.V.Sukhatankar, A.M.Narasale, M.M.Belekar, Y.G.Mulye, S.S.Saware. J. Instrum.Soc. India 31 (2) 128-135.

[2] Low cost PC based I-V measurement set-up for ion implanted semiconductor devices K.V.Sukhatankar, A.M.Narasale, M.M.Belekar, B.M.Arora Indian Journal of Pure & Applied Physics Vol 41 January 2003 pp 64-72.

[3] Computer (IBM PC) based I-V, C-V system. P.N.Reddy, S.V.Padurangaiah, S.Venkataramana Reddy, V.Rajgopal Reddy, B.P.N Reddy, B.Kartik J. Instrum.Soc. India 29 (3) 136-140.

[4] Digital principals and applications, Fourth edition (1986), McGraw Hill International Edition. A.P.Malvino and D.P.Leach p.244.